Voice chip

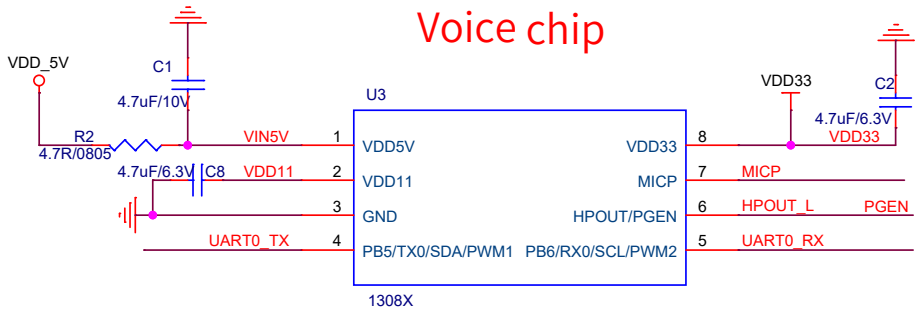

J14	Description
Short	By default, the device enters upgrade mode upon power-up, with a startup time of approximately 850 ms, making it suitable for products where power-on time is not a critical concern.
Open	The device powers on in normal operation mode with a startup time of approximately 350 ms. By shorting the test points before power-up, it can enter upgrade mode. Suitable for products requiring fast startup.

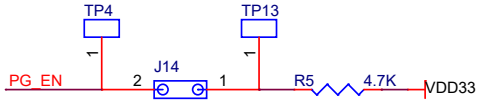

MIC

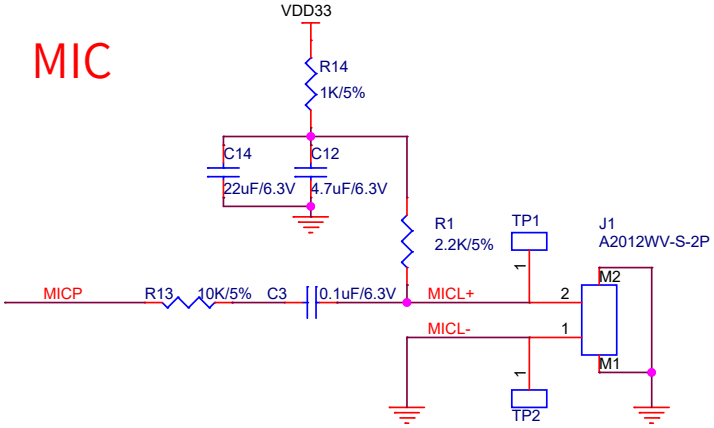

power and UART

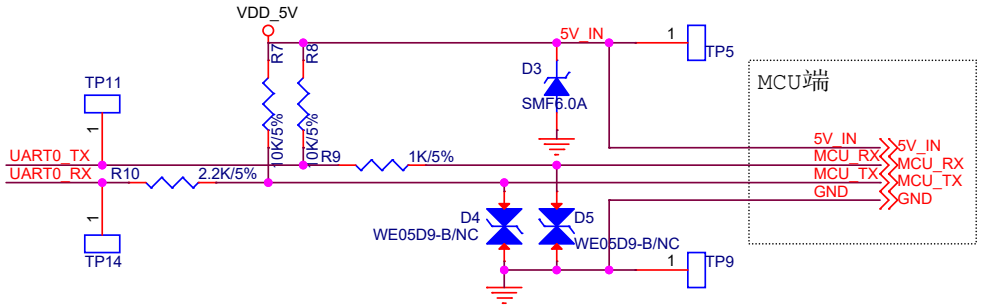

Class AB amplifier

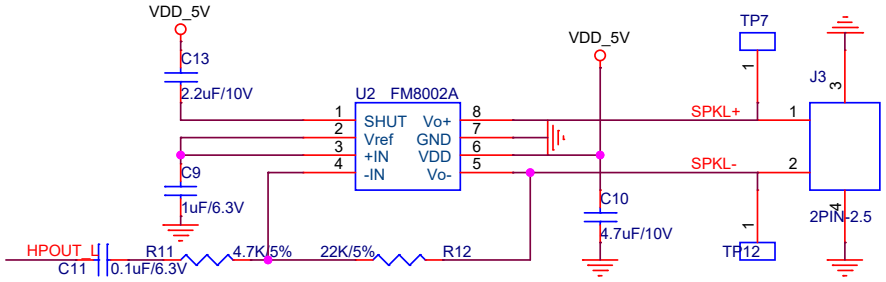

CI1308X Shared UART 0 Reference Design

Sheet Title = 02:Application		
Title		
Size	Document Number	Rev
Date: Friday, September 20, 2024	Sheet 3 of 3	